Lom Messan Hillah
Lom-Messan.Hillah@lip6.fr

This form is a summary description of the model entitled "Flexible Manufacturing System (FMS)" proposed for the Model Checking Contest @ Petri Nets. Models can be given in several instances parameterized by scaling parameters. Colored nets can be accompanied by one or many equivalent, unfolded P/T nets. Models are given together with property files (possibly, one per model instance) giving a set of properties to be checked on the model.

Description

This Petri net is extracted a benchmark used for SMART. It models a flexible manufacturing system.

The six largest instances have been added in 2019.

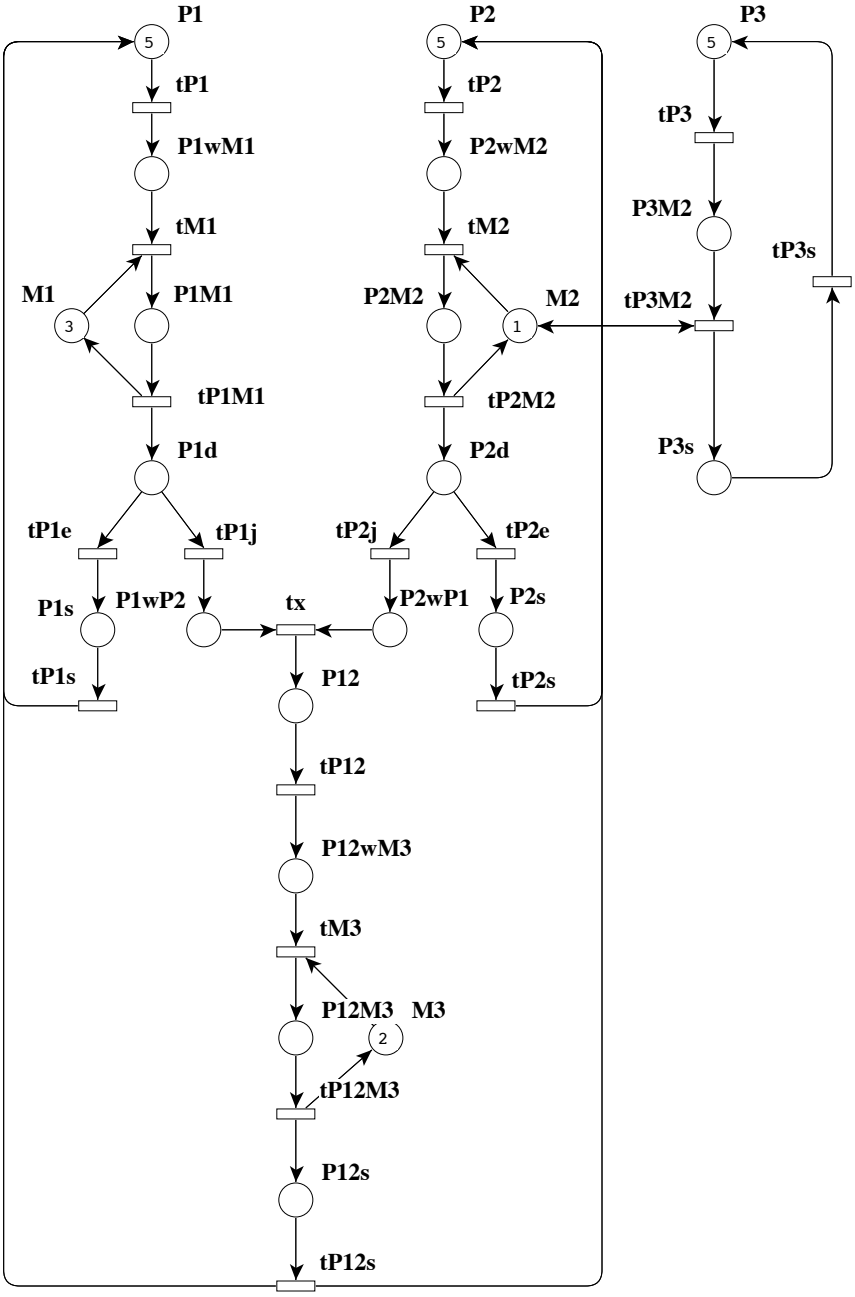

Lom Messan Hillah
Lom-Messan.Hillah@lip6.fr

References

http://www.cs.ucr.edu/~ciardo/SMART/

Scaling parameter

Parameter name	Parameter description	Chosen parameter values
N	The scale factor is a value N that changes the initial marking of places P_1, P_2 and P_3 (i.e., $M(P1) = M(P2) = M(P3) = N$)	2, 5, 10, 20, 50, 100, 200, 500, 1000, 2000, 5000, 10000, 20000, 50000

Size of the model

Although the model is parameterized, its size does not depend on parameter values.

number of places:	22
number of transitions:	20
number of arcs:	50

Structural properties

ordinary — *all arcs have multiplicity one* ✔
simple free choice — *all transitions sharing a common input place have no other input place* ✗ [a]
extended free choice — *all transitions sharing a common input place have the same input places* ✗ [b]
state machine — *every transition has exactly one input place and exactly one output place* ✗ [c]
marked graph — *every place has exactly one input transition and exactly one output transition* ✗ [d]
connected — *there is an undirected path between every two nodes (places or transitions)* ✔ [e]
strongly connected — *there is a directed path between every two nodes (places or transitions)* ✔ [f]
source place(s) — *one or more places have no input transitions* ✗ [g]
sink place(s) — *one or more places have no output transitions* ✗ [h]
source transition(s) — *one or more transitions have no input places* ✗ [i]
sink transitions(s) — *one or more transitions have no output places* ✗ [j]
loop-free — *no transition has an input place that is also an output place* ✗ [k]
conservative — *for each transition, the number of input arcs equals the number of output arcs* ✗ [l]
subconservative — *for each transition, the number of input arcs equals or exceeds the number of output arcs* ✗ [m]
nested units — *places are structured into hierarchically nested sequential units* [n] ✗

[a] 2 arcs are not simple free choice, e.g., the arc from place "M2" (which has 2 outgoing transitions) to transition "tM2" (which has 2 input places).
[b] transitions "tM2" and "tP3M2" share a common input place "M2", but only the former transition has input place "P2wM2".
[c] 9 transitions are not of a state machine, e.g., transition "tM1".
[d] 5 places are not of a marked graph, e.g., place "P1d".
[e] stated by CÆSAR.BDD version 2.8 on all 14 instances (2, 5, 10, 20, 50, 100, 200, 500, 1000, 2000, 5000, 10000, 20000, and 50000).
[f] stated by CÆSAR.BDD version 2.8 on all 14 instances (2, 5, 10, 20, 50, 100, 200, 500, 1000, 2000, 5000, 10000, 20000, and 50000).
[g] stated by CÆSAR.BDD version 2.8 on all 14 instances (2, 5, 10, 20, 50, 100, 200, 500, 1000, 2000, 5000, 10000, 20000, and 50000).
[h] stated by CÆSAR.BDD version 2.8 on all 14 instances (2, 5, 10, 20, 50, 100, 200, 500, 1000, 2000, 5000, 10000, 20000, and 50000).
[i] stated by CÆSAR.BDD version 2.8 on all 14 instances (2, 5, 10, 20, 50, 100, 200, 500, 1000, 2000, 5000, 10000, 20000, and 50000).
[j] stated by CÆSAR.BDD version 2.8 on all 14 instances (2, 5, 10, 20, 50, 100, 200, 500, 1000, 2000, 5000, 10000, 20000, and 50000).
[k] transition "tP3M2" is not loop free.
[l] 8 transitions are not conservative, e.g., transition "tM1".
[m] 4 transitions are not subconservative, e.g., transition "tP12M3".
[n] the definition of Nested-Unit Petri Nets (NUPN) is available from http://mcc.lip6.fr/nupn.php

Lom Messan Hillah
Lom-Messan.Hillah@lip6.fr

Behavioural properties

safe — *in every reachable marking, there is no more than one token on a place* ..... ✗ [o]
dead place(s) — *one or more places have no token in any reachable marking* ..... ✗ [p]
dead transition(s) — *one or more transitions cannot fire from any reachable marking* ..... ✗ [q]
deadlock — *there exists a reachable marking from which no transition can be fired* ..... ✗ [r]
reversible — *from every reachable marking, there is a transition path going back to the initial marking* ..... ?
live — *for every transition t, from every reachable marking, one can reach a marking in which t can fire* ..... ?

Size of the marking graphs

Parameter	Number of reachable markings	Number of transition firings	Max. number of tokens per place	Max. number of tokens per marking
$N = 2$	3444 [s]	16 311 [t]	3 [u]	12 [v]
$N = 5$	2.8950E+6 [w]	2.3527E+7 [x]	5 [y]	21 [z]
$N = 10$	2.501E+9 [aa]	2.7568E+10 [ab]	10 [ac]	36 [ad]
$N = 20$	6.0292E+12 [ae]	8.1442E+13 [af]	20 [ag]	66 [ah]
$N = 50$	4.2403E+17 [ai]	6.6135E+18 [aj]	50 [ak]	156 [al]
$N = 100$	2.7031E+21 [am]	?	100 [an]	306 [ao]
$N = 200$	1.9536E+25 [ap]	?	200 [aq]	606 [ar]
$N = 500$	2.7006E+30 [as]	?	500 [at]	$\geq$ 1506 [au]
$N = 1000$	?	?	?	$\geq$ 3006 [av]
$N = 2000$	?	?	?	$\geq$ 6006 [aw]
$N = 5000$	?	?	?	$\geq$ 15006 [ax]
$N = 10000$	?	?	?	$\geq$ 30006 [ay]
$N = 20000$	?	?	?	$\geq$ 60006 [az]
$N = 50000$	?	?	?	$\geq$ 150006 [ba]

[o] in the initial marking, some places have several tokens (the number of which depends on N).
[p] stated by CÆSAR.BDD version 3.3 on all 14 instances (2, 5, 10, 20, 50, 100, 200, 500, 1000, 2000, 5000, 10000, 20000, and 50000).
[q] stated by CÆSAR.BDD version 2.8 on all 14 instances (2, 5, 10, 20, 50, 100, 200, 500, 1000, 2000, 5000, 10000, 20000, and 50000).
[r] stated at MCC'2014 by GreatSPN and Lola on 8 instances, and by Tapaal on 5 instances.
[s] computed at MCC'2013 by Alpina, GreatSPN, ITS-Tools, Marcie, Neco, and PNXDD; confirmed at MCC'2014 by GreatSPN, Marcie, PNMC, PNXDD, Stratagem, and Tapaal.
[t] computed at MCC'2014 by Marcie.
[u] computed at MCC'2014 by GreatSPN, Marcie, PNMC, and Tapaal.
[v] computed at MCC'2014 by GreatSPN, Marcie, PNMC, and Tapaal.
[w] computed at MCC'2013 by Alpina, GreatSPN, ITS-Tools, Marcie, Neco, and PNXDD; confirmed at MCC'2014 by GreatSPN, Marcie, PNMC, PNXDD, Stratagem, and Tapaal.
[x] computed at MCC'2014 by Marcie.
[y] computed at MCC'2014 by GreatSPN, Marcie, PNMC, and Tapaal.
[z] computed at MCC'2014 by GreatSPN, Marcie, PNMC, and Tapaal.
[aa] computed at MCC'2013 by GreatSPN, ITS-Tools, Marcie, and PNXDD; confirmed at MCC'2014 by GreatSPN, Marcie, PNMC, PNXDD, and Stratagem.
[ab] computed at MCC'2014 by Marcie.
[ac] computed at MCC'2014 by GreatSPN, Marcie, and PNMC.
[ad] computed at MCC'2014 by GreatSPN, Marcie, and PNMC.
[ae] computed at MCC'2013 by GreatSPN, ITS-Tools, Marcie, and PNXDD; confirmed at MCC'2014 by GreatSPN, Marcie, PNMC, PNXDD, and Stratagem.
[af] computed at MCC'2014 by Marcie.
[ag] computed at MCC'2014 by GreatSPN, Marcie, and PNMC.
[ah] computed at MCC'2014 by GreatSPN, Marcie, and PNMC.
[ai] computed at MCC'2013 by GreatSPN, ITS-Tools, Marcie, and PNXDD; confirmed at MCC'2014 by GreatSPN, Marcie, PNMC, and PNXDD.
[aj] computed at MCC'2014 by Marcie.
[ak] computed at MCC'2014 by GreatSPN, Marcie, and PNMC.
[al] computed at MCC'2014 by GreatSPN, Marcie, and PNMC.
[am] computed at MCC'2013 by GreatSPN, ITS-Tools, and Marcie; confirmed at MCC'2014 by GreatSPN and PNMC.
[an] computed at MCC'2014 by GreatSPN and PNMC.
[ao] computed at MCC'2014 by GreatSPN and PNMC.
[ap] computed at MCC'2013 by ITS-Tools; confirmed at MCC'2014 by GreatSPN and PNMC.

Lom Messan Hillah
Lom-Messan.Hillah@lip6.fr

(aq) computed at MCC'2014 by GreatSPN.
(ar) computed at MCC'2014 by GreatSPN and PNMC.
(as) computed at MCC'2014 by PNMC.
(at) computed at MCC'2014 by GreatSPN and PNMC.
(au) lower bound given by the number of initial tokens.
(av) lower bound given by the number of initial tokens.
(aw) lower bound given by the number of initial tokens.
(ax) lower bound given by the number of initial tokens.
(ay) lower bound given by the number of initial tokens.
(az) lower bound given by the number of initial tokens.
(ba) lower bound given by the number of initial tokens.