Lom Messan Hillah
Lom-Messan.Hillah@lip6.fr

This form is a summary description of the model entitled "MAPK" proposed for the Model Checking Contest @ Petri Nets. Models can be given in several instances parameterized by scaling parameters. Colored nets can be accompanied by one or many equivalent, unfolded P/T nets. Models are given together with property files (possibly, one per model instance) giving a set of properties to be checked on the model.

Description

This Petri net is extracted from the examples of the data structures and software dependability group of the Brandenburg University of Technology Cottbus and models a biochemical reaction: Mitogen-activated protein kinase kaskade.

The five largest instances have been added in 2019.

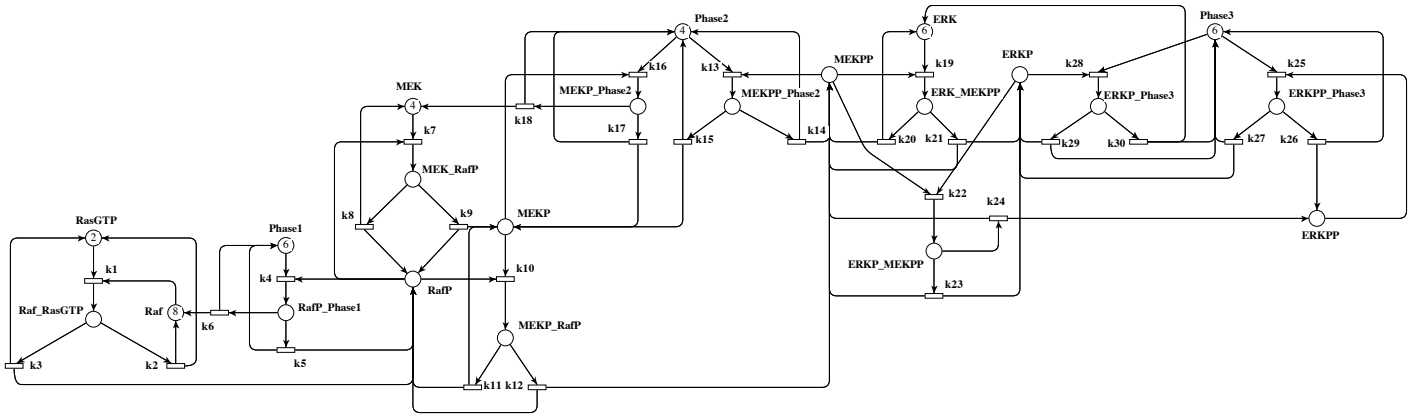

Graphical representation for $N = 8$

References

http://www-dssz.informatik.tu-cottbus.de/DSSZ/Examples/Mapk

Scaling parameter

Parameter name	Parameter description	Chosen parameter values
$N = N_1 + N_2$	$M_0(MEK) = M_0(Phase2) = N/2$, $M_0(Raf) = N$, $M_0(RasGTP) = N_1$, $M_0(Phase1) = M_0(ERK) = N_2$, $M_0(Phase3) = N_2$	8, 20, 40, 80, 160, 320, 640, 1280, 2560, 5120, 10240

Size of the model

Although the model is parameterized, its size does not depend on parameter values.

number of places:	22
number of transitions:	30
number of arcs:	90

Structural properties

ordinary — *all arcs have multiplicity one* ..... ✔
simple free choice — *all transitions sharing a common input place have no other input place* ..... ✗ [a]

[a] 14 arcs are not simple free choice, e.g., the arc from place "ERKP" (which has 2 outgoing transitions) to transition "k28" (which has 2 input places).

Lom Messan Hillah
Lom-Messan.Hillah@lip6.fr

extended free choice — *all transitions sharing a common input place have the same input places* ✗ [b]
state machine — *every transition has exactly one input place and exactly one output place* ✗ [c]
marked graph — *every place has exactly one input transition and exactly one output transition* ✗ [d]
connected — *there is an undirected path between every two nodes (places or transitions)* ✓ [e]
strongly connected — *there is a directed path between every two nodes (places or transitions)* ✓ [f]
source place(s) — *one or more places have no input transitions* ✗ [g]
sink place(s) — *one or more places have no output transitions* ✗ [h]
source transition(s) — *one or more transitions have no input places* ✗ [i]
sink transitions(s) — *one or more transitions have no output places* ✗ [j]
loop-free — *no transition has an input place that is also an output place* ✓ [k]
conservative — *for each transition, the number of input arcs equals the number of output arcs* ✗ [l]
subconservative — *for each transition, the number of input arcs equals or exceeds the number of output arcs* ✗ [m]
nested units — *places are structured into hierarchically nested sequential units* [n] ✗

Behavioural properties

safe — *in every reachable marking, there is no more than one token on a place* ✗ [o]
dead place(s) — *one or more places have no token in any reachable marking* ✗ [p]
dead transition(s) — *one or more transitions cannot fire from any reachable marking* ✗ [q]
deadlock — *there exists a reachable marking from which no transition can be fired* ? [r]
reversible — *from every reachable marking, there is a transition path going back to the initial marking* ?
live — *for every transition t, from every reachable marking, one can reach a marking in which t can fire* ?

---

[b] transitions "k22" and "k28" share a common input place "ERKP", but only the former transition has input place "MEKPP".
[c] 30 transitions are not of a state machine, e.g., transition "k2".
[d] 22 places are not of a marked graph, e.g., place "ERK_MEKPP".
[e] stated by CÆSAR.BDD version 2.8 on all 11 instances (8, 20, 40, 80, 160, 320, 640, 1280, 2560, 5120, and 10240).
[f] stated by CÆSAR.BDD version 2.8 on all 11 instances (8, 20, 40, 80, 160, 320, 640, 1280, 2560, 5120, and 10240).
[g] stated by CÆSAR.BDD version 2.8 on all 11 instances (8, 20, 40, 80, 160, 320, 640, 1280, 2560, 5120, and 10240).
[h] stated by CÆSAR.BDD version 2.8 on all 11 instances (8, 20, 40, 80, 160, 320, 640, 1280, 2560, 5120, and 10240).
[i] stated by CÆSAR.BDD version 2.8 on all 11 instances (8, 20, 40, 80, 160, 320, 640, 1280, 2560, 5120, and 10240).
[j] stated by CÆSAR.BDD version 2.8 on all 11 instances (8, 20, 40, 80, 160, 320, 640, 1280, 2560, 5120, and 10240).
[k] stated by CÆSAR.BDD version 2.8 on all 11 instances (8, 20, 40, 80, 160, 320, 640, 1280, 2560, 5120, and 10240).
[l] 30 transitions are not conservative, e.g., transition "k2".
[m] 20 transitions are not subconservative, e.g., transition "k2".
[n] the definition of Nested-Unit Petri Nets (NUPN) is available from http://mcc.lip6.fr/nupn.php
[o] in the initial marking, some places have several tokens (the number of which depends on N); confirmed by CÆSAR.BDD version 2.8 on all 11 instances (8, 20, 40, 80, 160, 320, 640, 1280, 2560, 5120, and 10240).
[p] stated by CÆSAR.BDD version 3.3 on all 11 instances (8, 20, 40, 80, 160, 320, 640, 1280, 2560, 5120, and 10240).
[q] stated by CÆSAR.BDD version 2.8 on all 11 instances (8, 20, 40, 80, 160, 320, 640, 1280, 2560, 5120, and 10240).
[r] stated to be false at MCC'2014 by GreatSPN, Lola, and Tappal on one instance ($N = 8$).

Lom Messan Hillah
Lom-Messan.Hillah@lip6.fr

Size of the marking graphs

Parameter	Number of reachable markings	Number of transition firings	Max. number of tokens per place	Max. number of tokens per marking
$N = 8$	6.1106E+6 [(s)]	7.8949E+7 [(t)]	8 [(u)]	36 [(v)]
$N = 20$	8.8126E+10 [(w)]	1.6890E+12 [(x)]	20 [(y)]	90 [(z)]
$N = 40$	4.7829E+14 [(aa)]	1.1099E+16 [(ab)]	40 [(ac)]	180 [(ad)]
$N = 80$	5.6349E+18 [(ae)]	1.4704E+20 [(af)]	80 [(ag)]	360 [(ah)]
$N = 160$	1.0640E+23 [(ai)]	?	160 [(aj)]	720 [(ak)]
$N = 320$	2.6163E+27 [(al)]	?	320 [(am)]	1440 [(an)]
$N = 640$	?	?	?	$\geq$ 2880 [(ao)]
$N = 1280$	?	?	?	$\geq$ 5760 [(ap)]
$N = 2560$	?	?	?	$\geq$ 11520 [(aq)]
$N = 5120$	?	?	?	$\geq$ 23040 [(ar)]
$N = 10240$	?	?	?	$\geq$ 46080 [(as)]

(s) computed at MCC'2013 by GreatSPN, ITS-Tools, Marcie, Neco, and PNXDD; confirmed at MCC'2014 by GreatSPN, Marcie, PNMC, PNXDD, Stratagem, and Tapaal.
(t) computed at MCC'2014 by Marcie.
(u) computed at MCC'2014 by GreatSPN, Marcie, PNMC, and Tapaal.
(v) computed at MCC'2014 by Marcie, PNMC, and Tapaal.
(w) computed at MCC'2013 by GreatSPN, ITS-Tools, Marcie, and PNXDD; confirmed at MCC'2014 by Marcie, PNMC, and PNXDD.
(x) computed at MCC'2014 by Marcie.
(y) computed at MCC'2014 by Marcie and PNMC.
(z) computed at MCC'2014 by Marcie and PNMC.
(aa) computed at MCC'2013 by GreatSPN, ITS-Tools, Marcie, and PNXDD; confirmed at MCC'2014 by Marcie, PNMC, and PNXDD.
(ab) computed at MCC'2014 by Marcie.
(ac) computed at MCC'2014 by Marcie and PNMC.
(ad) computed at MCC'2014 by Marcie and PNMC.
(ae) computed at MCC'2013 by ITS-Tools, and PNXDD; confirmed at MCC'2014 by Marcie and PNMC.
(af) computed at MCC'2014 by Marcie.
(ag) computed at MCC'2014 by Marcie and PNMC.
(ah) computed at MCC'2014 by Marcie and PNMC.
(ai) computed at MCC'2014 by PNMC.
(aj) computed at MCC'2014 by PNMC.
(ak) computed at MCC'2014 by PNMC.
(al) computed at MCC'2014 by PNMC.
(am) computed at MCC'2014 by PNMC.
(an) computed at MCC'2014 by PNMC.
(ao) lower bound given by the number of initial tokens.
(ap) lower bound given by the number of initial tokens.
(aq) lower bound given by the number of initial tokens.
(ar) lower bound given by the number of initial tokens.
(as) lower bound given by the number of initial tokens.