Fabrice Kordon
Fabrice.Kordon@lip6.fr

This form is a summary description of the model entitled "Permutation admissibility in multistage interconnection networks" proposed for the Model Checking Contest @ Petri Nets. Models can be given in several instances parameterized by scaling parameters. Colored nets can be accompanied by one or many equivalent, unfolded P/T nets. Models are given together with property files (possibly, one per model instance) giving a set of properties to be checked on the model.

Description

The model describes a 8×8 4 stages shuffle-exchange network. In order to ease readability, the net components are grouped in columns similar to the way the switches are arranged in stages. Thus, whole net is represented as a cascade of columns alternating in type of the components being either place or transition. Transitions occur column-wise from the leftmost to the rightmost and in columns from the topmost to the bottommost. It can be easily seen that no token can visit a place more than once. Direction of the arcs indicates the flow of tokens through the net.

Here, we consider the scaling parameter N as a multiplier for the initial marking in places $\mathbf{in}\langle x\rangle$ and **c5**. The figure shows the model when $N = 1$.

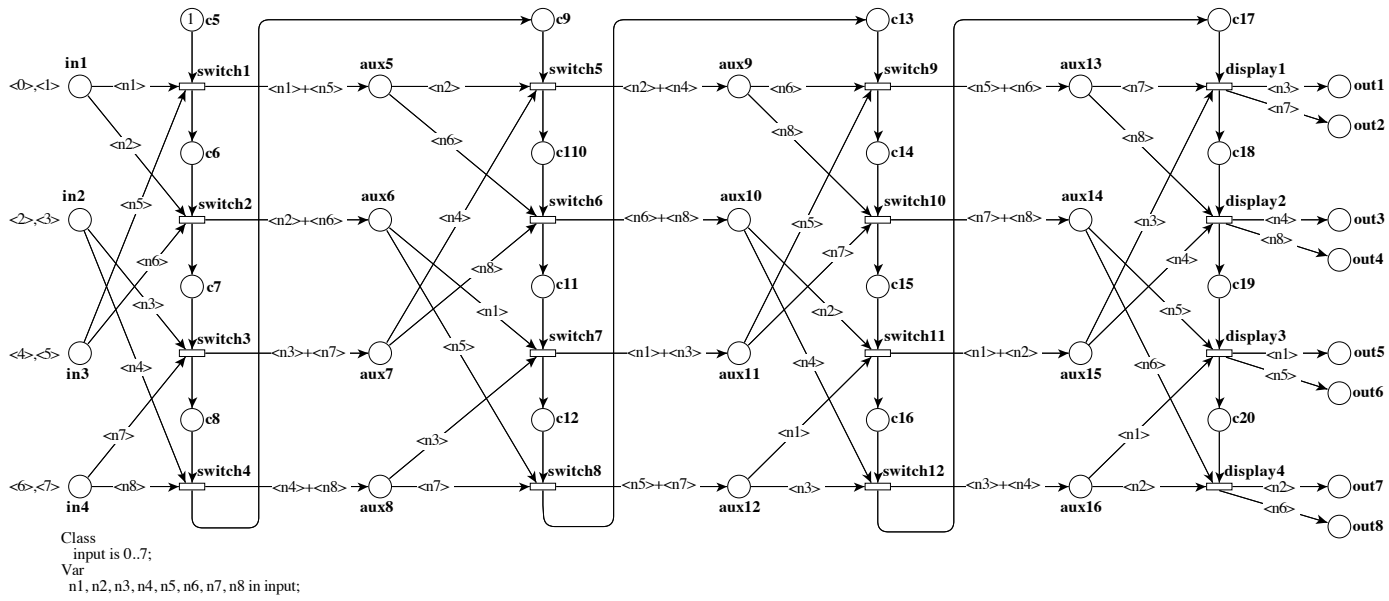

Graphical representation for $N = 1$

References

R. Bashirov, F. Kordon, and H. Lort. Exploiting colored Petri nets to decide on permutation admissibility. *Acta Informatica*, 46(1):43–55, February 2009.

Scaling parameter

Parameter name	Parameter description	Chosen parameter values
N	Multiplier for the marking of places $\mathbf{in}\langle x\rangle$ and **c5**	1, 2, 5, 10, 20, 50

Size of the model

Although the model is parameterized, its size does not depend on parameter values.

Fabrice Kordon
Fabrice.Kordon@lip6.fr

number of places:	40
number of transitions:	16
number of arcs:	83

Structural properties

free choice — *all (different) transitions with a shared input place have no other input place* ..... ✗ [a]
state machine — *every transition has exactly one input place and exactly one output place* ..... ✗ [b]
marked graph — *every place has exactly one input transition and exactly one output transition* ..... ✗ [c]
connected — *there is a undirected path between every two nodes (places or transitions)* ..... ✓ [d]
strongly connected — *there is a directed path between every two nodes (places or transitions)* ..... ✗ [e]
source place(s) — *one or more places have no input transitions* ..... ✓ [f]
sink place(s) — *one or more places have no output transitions* ..... ✓ [g]
source transition(s) — *one or more transitions have no input places* ..... ✗ [h]
sink transitions(s) — *one or more transitions have no output places* ..... ✗ [i]
loop-free — *no transition has an input place that is also an output place* ..... ✓ [j]
conservative — *for each transition, the number of input arcs equals the number of output arcs* ..... ✗ [k]
subconservative — *for each transition, the number of input arcs equals or exceeds the number of output arcs* ..... ✗ [l]

Behavioural properties

safe — *in every reachable marking, there is no more than one token on a place* ..... ✗ [m]
deadlock — *there exists a reachable marking from which no transition can be fired* ..... ✓
reversible — *from every reachable marking, there is a transition path going back to the initial marking* ..... ✗
quasi-live — *for every transition t, there exists a reachable marking in which t can fire* ..... ?
live — *for every transition t, from every reachable marking, one can reach a marking in which t can fire* ..... ?

Size of the marking graphs

Parameter	Number of reachable markings	Number of transition firings	Max. number of tokens per place	Max. number of tokens per marking
$N = 1$	52 537 [n]	?	?	≥ 9 [o]
$N = 2$	?	?	?	≥ 18
$N = 5$	?	?	?	≥ 45
$N = 10$	?	?	?	≥ 90
$N = 20$	?	?	?	≥ 180
$N = 50$	?	?	?	≥ 450

[a] 1776 arcs are not free choice, e.g., the arc from place "in4_6" (which has 4 outgoing transitions) to transition "switch3_3_6" (which has 3 input places).
[b] 592 transitions are not of a state machine, e.g., transition "display4_0_0".
[c] 168 places are not of a marked graph, e.g., place "in4_6".
[d] stated by CÆSAR.BDD version 1.7 on all 6 instances (1, 2, 5, 10, 20, and 50).
[e] from place "aux16_0" one cannot reach place "in4_6".
[f] there exist 9 source places, e.g., place "in4_6".
[g] there exist 64 sink places, e.g., place "out7_1".
[h] stated by CÆSAR.BDD version 1.7 on all 6 instances (1, 2, 5, 10, 20, and 50).
[i] stated by CÆSAR.BDD version 1.7 on all 6 instances (1, 2, 5, 10, 20, and 50).
[j] stated by CÆSAR.BDD version 1.7 on all 6 instances (1, 2, 5, 10, 20, and 50).
[k] stated by PNML2NUPN 1.3.0 on all 6 instances (1, 2, 5, 10, 20, and 50).
[l] stated by PNML2NUPN 1.3.0 on all 6 instances (1, 2, 5, 10, 20, and 50).
[m] in the initial marking, some places have several tokens (the number of which depends on N).
[n] Computed by alpina, and ITS-Tools at MCC'2013.
[o] lower bound given by the number of initial tokens.