Christian Rohr
christian.rohr@b-tu.de

This form is a summary description of the model entitled "ERK" proposed for the Model Checking Contest @ Petri Nets. Models can be given in several instances parameterized by scaling parameters. Colored nets can be accompanied by one or many equivalent, unfolded P/T nets. Models are given together with property files (possibly, one per model instance) giving a set of properties to be checked on the model.

Description

ERK is a short name for "RKIP/MEK-ERK signalling pathway". The RKIP inhibited ERK pathway published in [CSK+03], discussed as qualitative and continuous Petri nets in [GH06], and as three related Petri net models in [HDG10].

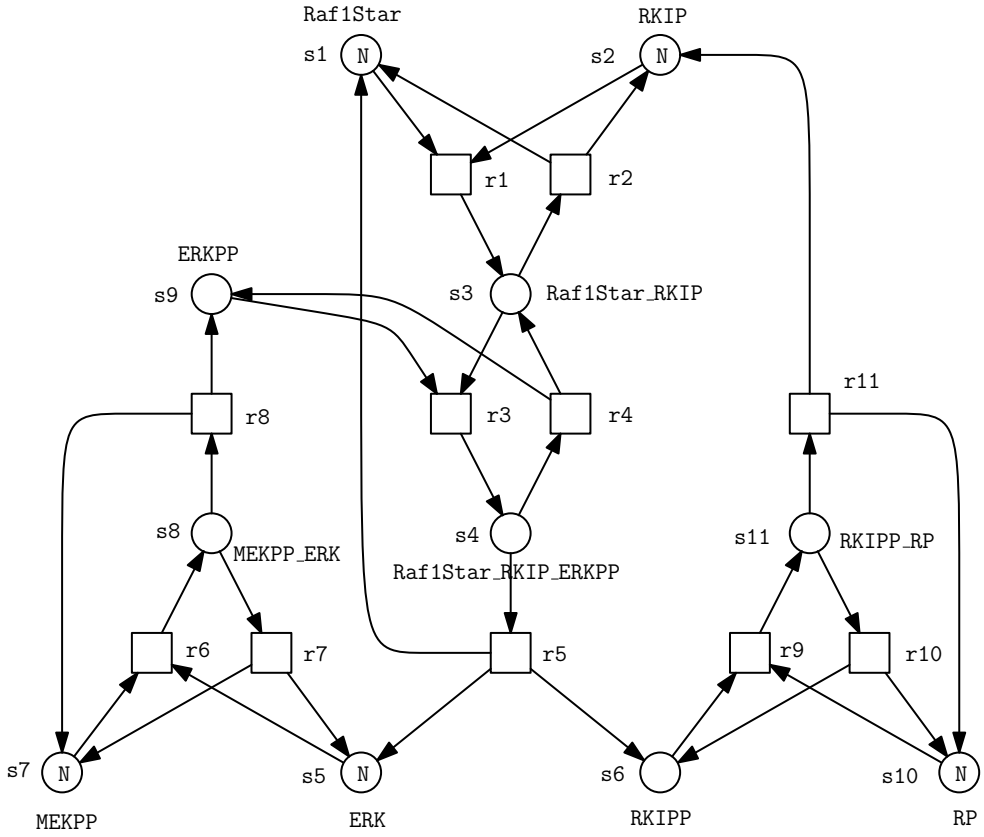

Graphical representation with parameter N

References

CSK+03 K.-H. Cho, S.-Y. Shin, H.-W. Kim, O. Wolkenhauer, B. McFerran and W. Kolch: Mathematical modeling of the influence of RKIP on the ERK signaling pathway; In CMSB 2003, LNCS 2602, Springer, pages 127–141, 2003.

GH06 Gilbert, D. and Heiner, M.: From Petri nets to differential equations - an integrative approach for biochemical network analysis; In Proc. ICATPN 2006, LNCS 4024, Springer, pages 181–200, 2006.

HDG10 M. Heiner, R. Donaldson and D. Gilbert: Petri Nets for Systems Biology; In Symbolic Systems Biology: Theory and Methods, (MS Iyengar, Ed.), Jones & Bartlett Learning, LCC, pages 61–97, 2010.

Christian Rohr
christian.rohr@b-tu.de

Scaling parameter

Parameter name	Parameter description	Chosen parameter values
N	initial number of tokens on places ERK, MEKPP, Raf1Star, RKIP and RP	1, 10, 100, 1000, 10000, 100000

Size of the model

Although the model is parameterized, its size does not depend on parameter values.

number of places:	11
number of transitions:	11
number of arcs:	34

Structural properties

free choice — *all (different) transitions with a shared input place have no other input place* ✗ [a]
state machine — *every transition has exactly one input place and exactly one output place* ✗ [b]
marked graph — *every place has exactly one input transition and exactly one output transition* ✗ [c]
connected — *there is a undirected path between every two nodes (places or transitions)* ✓ [d]
strongly connected — *there is a directed path between every two nodes (places or transitions)* ✓ [e]
source place(s) — *one or more places have no input transitions* ✗ [f]
sink place(s) — *one or more places have no output transitions* ✗ [g]
source transition(s) — *one or more transitions have no input places* ✗ [h]
sink transitions(s) — *one or more transitions have no output places* ✗ [i]
loop-free — *no transition has an input place that is also an output place* ✓ [j]
conservative — *for each transition, the number of input arcs equals the number of output arcs* ✗ [k]
subconservative — *for each transition, the number of input arcs equals or exceeds the number of output arcs* ✗ [l]

Behavioural properties

safe — *in every reachable marking, there is no more than one token on a place* ? [m]
deadlock — *there exists a reachable marking from which no transition can be fired* ✗ [n]
reversible — *from every reachable marking, there is a transition path going back to the initial marking* ✓
quasi-live — *for every transition t, there exists a reachable marking in which t can fire* ✓ [o]
live — *for every transition t, from every reachable marking, one can reach a marking in which t can fire* ✓

---

[a] there is an arc from place "p2" (which has 2 outgoing transitions) to transition "t2" (which has 2 input places).
[b] 11 transitions are not of a state machine, e.g., transition "t0".
[c] 11 places are not of a marked graph, e.g., place "p0".
[d] stated by CÆSAR.BDD version 2.0 on all 6 instances (1, 10, 10^2, 10^3, 10^4, and 10^5).
[e] stated by CÆSAR.BDD version 2.0 on all 6 instances (1, 10, 10^2, 10^3, 10^4, and 10^5).
[f] stated by CÆSAR.BDD version 2.0 on all 6 instances (1, 10, 10^2, 10^3, 10^4, and 10^5).
[g] stated by CÆSAR.BDD version 2.0 on all 6 instances (1, 10, 10^2, 10^3, 10^4, and 10^5).
[h] stated by CÆSAR.BDD version 2.0 on all 6 instances (1, 10, 10^2, 10^3, 10^4, and 10^5).
[i] stated by CÆSAR.BDD version 2.0 on all 6 instances (1, 10, 10^2, 10^3, 10^4, and 10^5).
[j] stated by CÆSAR.BDD version 2.0 on all 6 instances (1, 10, 10^2, 10^3, 10^4, and 10^5).
[k] 11 transitions are not conservative, e.g., transition "t0".
[l] 7 transitions are not subconservative, e.g., transition "t1".
[m] stated by CÆSAR.BDD version 2.0 to be true for $N = 1$, and false on the remaining 5 instance(s).
[n] confirmed by CÆSAR.BDD version 2.0 to be false for $N = 1$, and unknown on the remaining 5 instance(s).
[o] stated by CÆSAR.BDD version 2.0 on all 6 instances (1, 10, 10^2, 10^3, 10^4, and 10^5).

Christian Rohr
christian.rohr@b-tu.de

Size of the marking graphs

Parameter	Number of reachable markings	Number of transition firings	Max. number of tokens per place	Max. number of tokens per marking
$N = 1$	13	?	N	$5 \cdot N$
$N = 10$	47 047 [p]	?	N	$5 \cdot N$
$N = 100$	15 914 114 086 [q]	?	N	$5 \cdot N$
$N = 1\,000$	14 081 614 073 878 351 [r]	?	N	$5 \cdot N$
$N = 10\,000$	?	?	N	$5 \cdot N$
$N = 100\,000$	?	?	N	$5 \cdot N$

[p] Computed by Marcie on 2013-12-13.
[q] Computed by Marcie on 2013-12-13.
[r] Computed by Marcie on 2013-12-13.